ANGLE BRACKET 78x78x30

Material: Angle bracket: steel, zinc-plated

For connecting two profiles at a 90° angle.
Mounting this item does not require any profile processing.

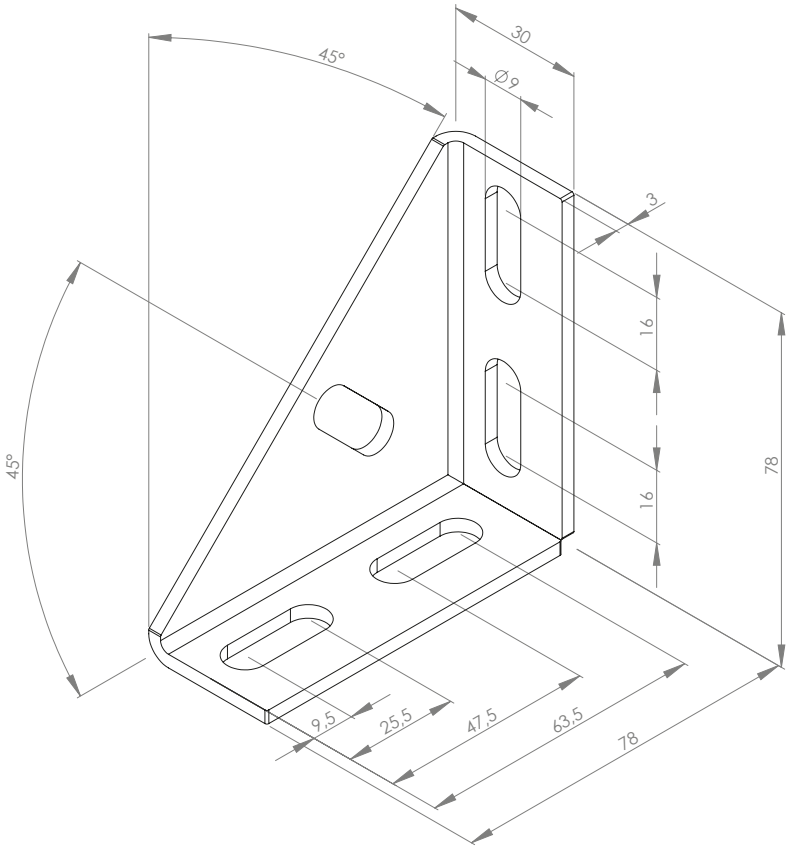

Description	Slot	Dimensions (mm)	Version	Weight (g)	ESD	Art. no.:
Angle bracket 78x78x30	-	78x78x30	-	160.0		**321450**