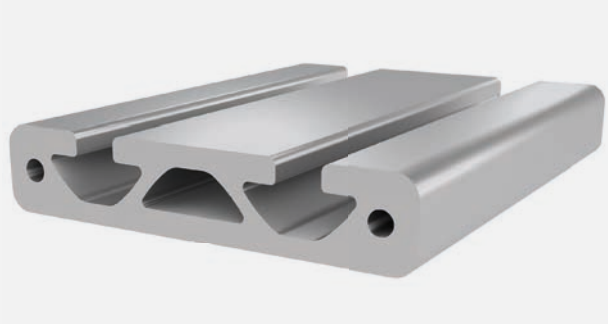

PROFILE 8 80x16

Material: anodised aluminium

Technical data:

Surface A [cm²]	8.13
Moment of inertia Ix [cm⁴]	2.15
Moment of inertia Iy [cm⁴]	50.76
Section modulus Wx [cm³]	2.69
Section modulus Wy [cm³]	12.69
Weight m [kg/m]	2.20

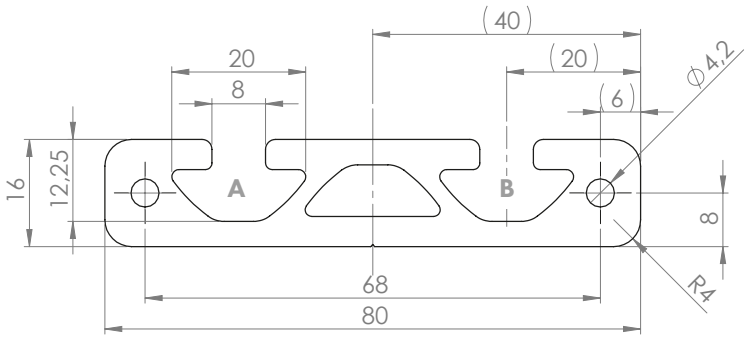

Standard processing:	Art. no.:
M5 / -	**103170**
M5 / M5	**103171**
M5= / -	**103172**
M5= / M5=	**103175**
D7 / -	**102350**
D7 / D7	**102351**
D7= / -	**102354**
D7= / D7=	**102355**

Explanations and further processing options can be found on p. 223-231

Dimensions (version)	Length (mm)	Slot	Weight (kg)	Art. no.:
80x16	Cut to length	8	2.0 kg/m	**20208800**
80x16	3060	8	2.0 kg/m	**20208803**
80x16	6060	8	2.0 kg/m	**20208801**

If this profile is cut to length, the cutting costs incurred per saw cut must be factored in. **(Art. no.: 101020)**

COVER CAP 8 80x16

Material: PA plastic

Dimensions (version)	Slot	Weight (g)	Version	Art. no.:
80x16	8	10	Black	**421016**